इंटरनेट मानक

Disclosure to Promote the Right To Information

Whereas the Parliament of India has set out to provide a practical regime of right to information for citizens to secure access to information under the control of public authorities, in order to promote transparency and accountability in the working of every public authority, and whereas the attached publication of the Bureau of Indian Standards is of particular interest to the public, particularly disadvantaged communities and those engaged in the pursuit of education and knowledge, the attached public safety standard is made available to promote the timely dissemination of this information in an accurate manner to the public.

"जानने का अधिकार, जीने का अधिकार"
Mazdoor Kisan Shakti Sangathan
"The Right to Information, The Right to Live"

"पुराने को छोड नये के तरफ"
Jawaharlal Nehru
"Step Out From the Old to the New"

IS 6828 (1972): Forceps, Extraction, Dental, Upper Molars, Right [MHD 8: Dentistry]

"ज्ञान से एक नये भारत का निर्माण"
Satyanarayan Gangaram Pitroda
"Invent a New India Using Knowledge"

Act Number 22 of 2005
The Indian Parliament
RIGHT TO INFORMATION

Made Available By
Public.Resource.Org

"ज्ञान एक ऐसा खजाना है जो कभी चुराया नहीं जा सकता है"
Bhartṛhari—Nītiśatakam
"Knowledge is such a treasure which cannot be stolen"

BLANK PAGE

BRUTUM FULMEN

IGNORANTIA JURIS NON EXCUSAT

PROTECTED BY COPYRIGHT

UDC 615·472·4 : 616·314·7-089·87-72

Indian Standard

(Reaffirmed 1998)

SPECIFICATION FOR FORCEPS, EXTRACTION, DENTAL, UPPER MOLARS, RIGHT

Dental Instruments Sectional Committee, CPDC 21: Dental Extraction Forceps Subcommittee, CPDC 21 : 2 [Ref: Doc: CPDC 21 (719)]

1. Scope — Dimensional and other requirements for dental forceps for the extraction of right upper molars.

2. Shape and Dimensions — As shown in Fig. 1 and 2.

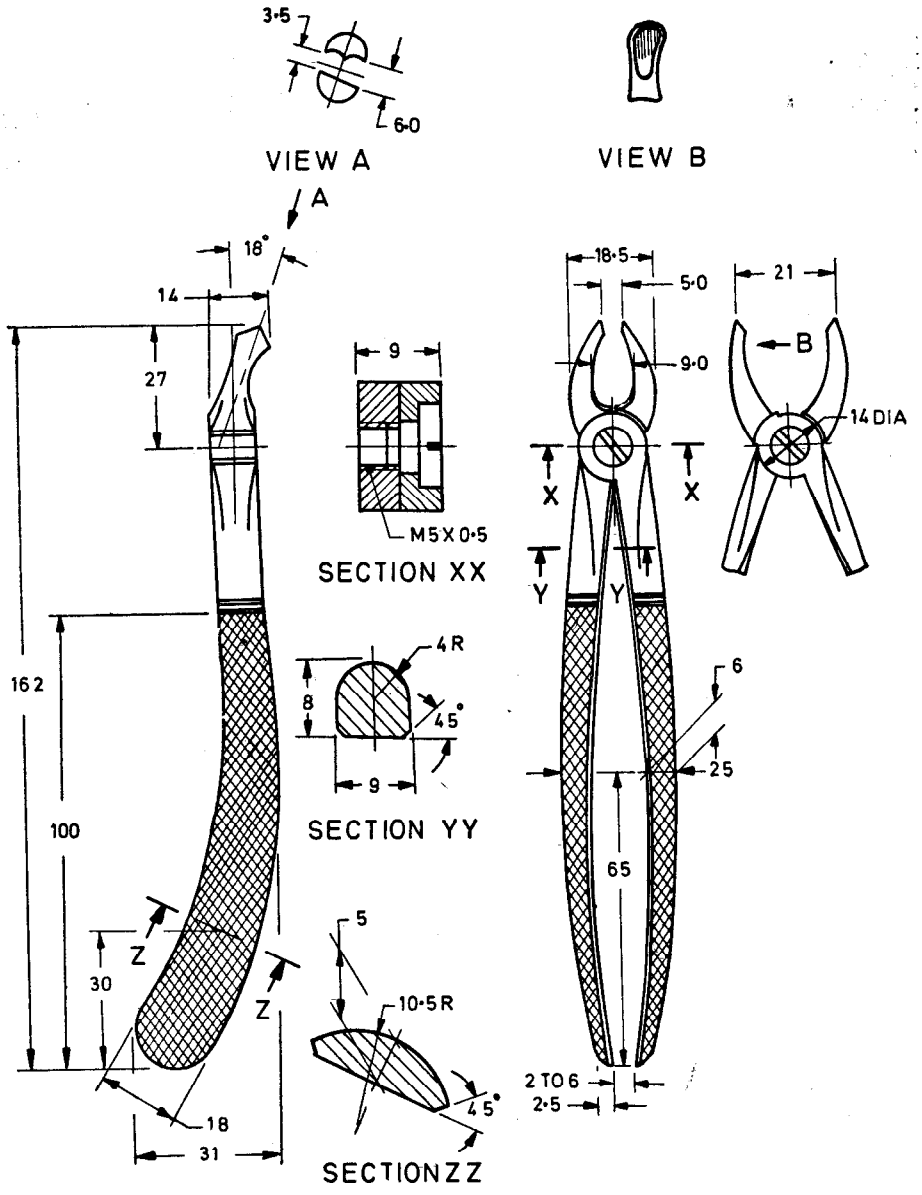

All dimensions in millimetres.

FIG. 1 FORCEPS, EXTRACTION, DENTAL, RIGHT UPPER MOLARS

3. Weight — Shall be 155 g.

4. Performance Load — Shall be 37 kg.

5. Other Requirements — All the requirements given in IS : 6868-1972. 'General requirements for forceps, extraction, dental' shall apply.

Adopted 28 December 1972

© April 1973, ISI

[redacted] Gr 1

INDIAN STANDARDS INSTITUTION
MANAK BHAVAN, 9 BAHADUR SHAH ZAFAR MARG
NEW DELHI 1

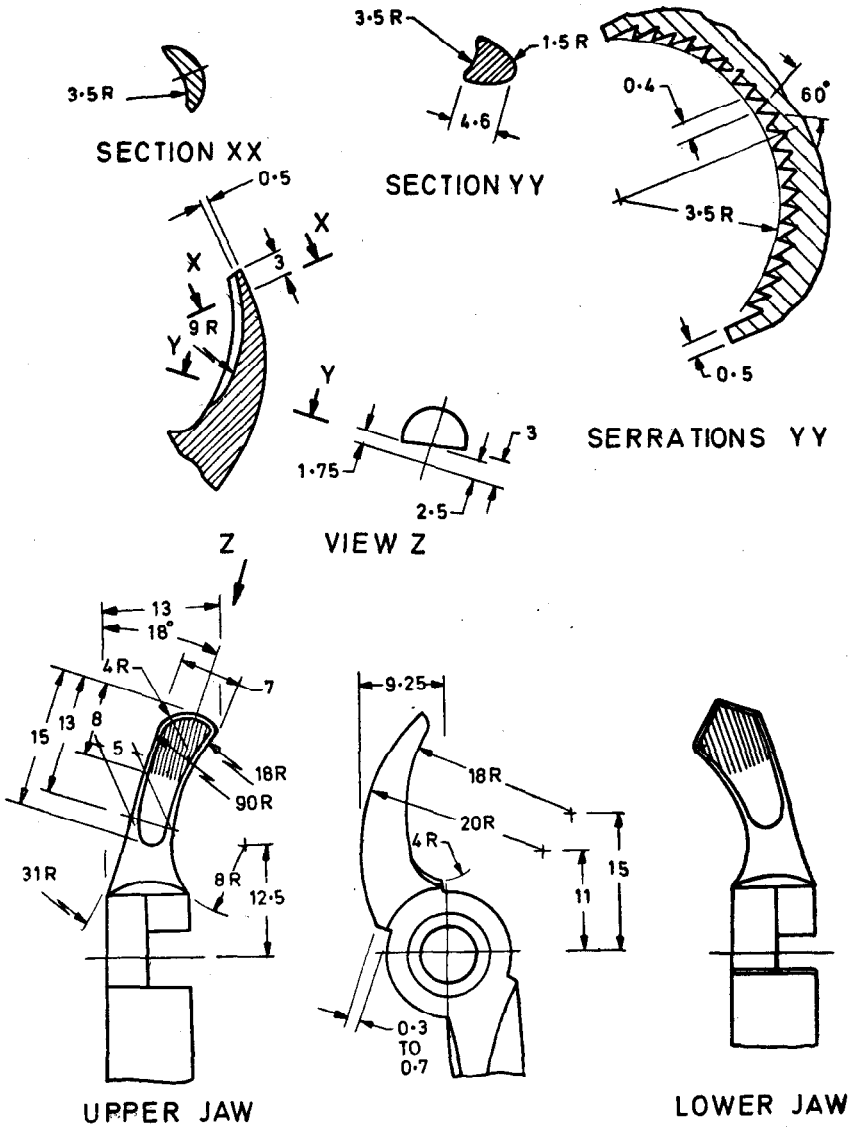

All dimensions in millimetres.

FIG. 2 DETAILS OF WORKING-ENDS, RIGHT UPPER MOLARS

Printed at Printograph, New Delhi 5 (India)